Figure S1

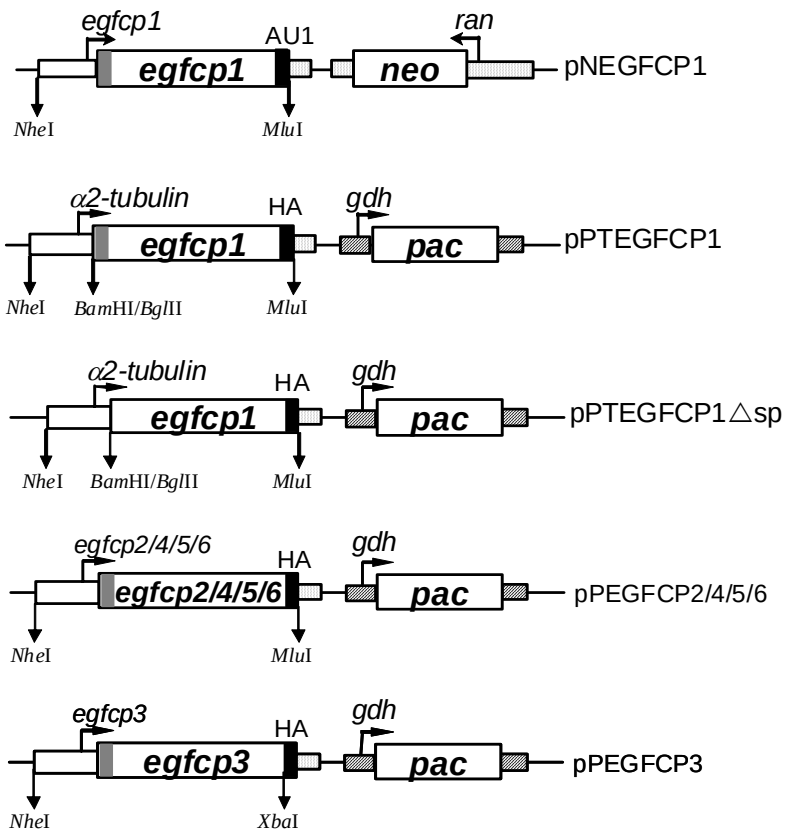

Fig. S1. Schematic representation of plasmid construction. For constructing pPTEGFCP1, a PCR with oligonucleotides TUBNF (GGCGGCTAGCCGCAGACGCATGA) and TUBBR (GGCGGGATCCTTTTATTTCCGCCCGTCCAG) generated a 0.3-kb product that was digested with *Nhe*I and *Bam*HI. Another PCR with primers egfcp1BF (GGCGGAGATCTATGATAGCCGCGGCCTTTCTC) and egfcp1MR (GGCGACGCGTCACACATCTACCATCGC) generated a 1.7-kb PCR product that was digested with *Bgl*II and *Mlu*I and cloned into *Nhe*I/*Mlu*I digested pPop2NHA [27] with the 0.3-kb *Nhe*I/*Bam*HI fragment. The resulting plasmid, pPTEGFCP1, contained the *egfcp1* gene controlled by *α2-tubulin* promoter with an HA tag fused at its C-terminus. For constructing pNEGFCP1, we integrated the AU1 tag sequence into the pNLop2-1 vector [28]. Complementary oligonucleotides AUF (CTAGCAAAAACGCGTGATACGTATCGATACATCTAAG) and AUR (AATTCTTAGATGTATCGATACGTATCACGCGTTTTTG) were phosphorylated and annealed. The double-strand DNA fragment was ligated into *Nhe*I/*Eco*RI-digested and dephosphorylated pNLop2-1 to produce pNAU. The *egfcp1* gene and its 360-bp

5’-flanking region was amplified with oligonucleotides egfcp1NF (GGCGGCTAGCTCAACAGAGGAGAACGA) and egfcp1MR, digested with *Nhe*I/*Mlu*I, and ligated in place of the *Nhe*I/*Mlu*I-excised luciferase gene in pNAU. The resulting plasmid, pNEGFCP1, contained the *egfcp1* gene controlled by its own promoter with an AU1 tag fused at its C-terminus. For constructing pPTEGFCP1△sp, a PCR with oligonucleotides egfcp1dBF (GGGCGAGATCTATGGATGGCGAGGTGGATGTAAAC), egfcp1MR generated a 1.5-kb product was digested with *Bgl*II and *Mlu*I, and cloned into *Bam*HI/*Mlu*I digested pPTEGFCP1. The resulting plasmid, pPTEGFCP1△sp, contains an *egfcp1* gene lacking the coding sequence for the predicted signal peptide sequence (nucleotides 4-48, residues 2-16). For constructing pPEGFCP2 (or pPEGFCP4, pPEGFCP5, or pEGFCP6), a PCR with oligonucleotides EGFCP2NF (GGGCGGCTAGCGAGGAGCTCTCTGCGAAAGAC) and EGFCP2MR (GGGCGACGCGTATTGCCATAGAAACAAGCTCC) (or EGFCP4NF (GGGCGGCTAGCTGCTGGTTTGAAGGAGGCGCT) and EGFCP4MR (GGGCGACGCGTCGCTGCTCTTTCACAATATCC), EGFCP5NF (GGGCGGCTAGCTGGTCTTAAAGCGGCTGATGG) and EGFCP5MR (GGGCGACGCGTAAGTGTTTTTACATTACAGTG), EGFCP6NF (GGGCGGCTAGCTGACCTTGGGGGCAACGGGCG) and EGFCP6MR (GGGCGACGCGTCTGGGAGCTGCTGACTGCACA)) generated a 1.7-kb product was digested with *Nhe*I and *Mlu*I, and cloned into *Nhe*I/*Mlu*I digested pPTEGFCP1. The resulting plasmid, pPEGFCP2, pPEGFCP4, pPEGFCP5, or pPEGFCP6, contains the *egfcp2*, *egfcp4*, *egfcp5*, or *egfcp6* gene controlled by its own promoter with an HA tag fused at its C-terminus. For constructing pPEGFCP3, a PCR with oligonucleotides EGFCP3NF (GGGCGGCTAGCTTAGAGTAAATTTAAGGGACT) and EGFCP3XR (GGGCGTCTAGACTATACCCATACGATGTTCCAGATTACGCTATCGCTATAGA AACAGGCTCC) generated a 1.7-kb product was digested with *Nhe*I and *Xba*I, and cloned into *Nhe*I/*Xba*I digested pPop2N [27]. The resulting plasmid, pPEGFCP3, contains an *egfcp3* gene controlled by its own promoter with an HA tag fused at its C-terminus.